CAVIUM

Multi-Core MIPS64® Processors

OCTEON® CN31XX Single and Dual Core MIPS64 Based SoCs

Product Brief

OVERVIEW

The OCTEON® CN31XX family of Single and Dual Core MIPS64 processors targets intelligent networking, control plane, storage, and wireless applications in next-generation equipment from hundreds of Mbps to 2 Gbps performance. This cost-effective family consists of 8 different software-compatible parts, with one or two cnMIPS64 cores on a single chip that integrate next-generation I/Os, including gigabit Ethernet and USB 2.0, along with the most advanced security and application hardware acceleration to deliver a 3x+ performance, power and real-estate value proposition over alternatives.

FEATURES

Custom CPU cores optimized for networking
- 1-2 cnMIPS™ CPU cores (MIPS64/32 compatible) with MMU
- Available in 300 MHz to 500 MHz versions
- Enhanced MIPS64 integer (Release 2) instruction set
- Dual-issue, five-stage pipeline, optimized latencies
- Auto instruction pre-fetching and advanced data pre-fetching features to minimize memory stalls

High-performance coherent memory subsystem
- 256KB ECC protected 4-way set associative L2 cache with locking, partitioning features for optimal performance
- Integrated mainstream 64/72-bit DDR2 memory controller with ECC, up to DDR2-667
- Optional, additional low-latency 16-bit DDR2-667 for content based processing and meta-data

Integrated coprocessors for application acceleration
- Packet I/O processing, QoS, TCP, Acceleration
- Support for IPsec, SSL, SRTP, WLAN security (includes DES, 3DES, AES (up to 256-bit), SH-A1, SHA-2 up to SHA-512, RSA, DH)
- Regular expression, compression/de-compression

Integrated high-performance networking interfaces
- Up to 3 Configurable Ethernet I/Os - 3x 10/100/1000 Ethernet MACs (RGMII) or 1x RGMII + 1x GMII
- Integrated 32-bit, 100 MHz PCI/PCI-X host or slave
- TDM/PCM interface for glueless VoIP support
- USB 2.0, high-speed (480 Mbps), host with integrated PHY

BENEFITS

Market-leading performance
- Up to 2 Billion instructions per second
- 500 Mbps to 2 Gbps application performance
  - Up to 2 Gbps 64B IP forwarding
  - Up to 2 Gbps for TCP, IPsec, SSL, compression/ decompression
  - Up to 1 Gbps for Regular Expression

Support for voice, video and data with integrated hardware
- Queuing, scheduling
- Very low latency for real-time traffic

Reduced BOM cost with essential interfaces for next generation networking equipment
- Glueless support for switching, WLAN, voice and video
- High-speed USB 2.0 enables printer, storage connectivity

Flexible architecture allows host and coprocessor Implementations

Industry-standard programming model without any need for proprietary tools or micro-coding

Fully software compatible with OCTEON CN38XX, CN36XX, CN30XX to deliver 1-16 CPU scalability

OCTEON® CN31XX - Block Diagram

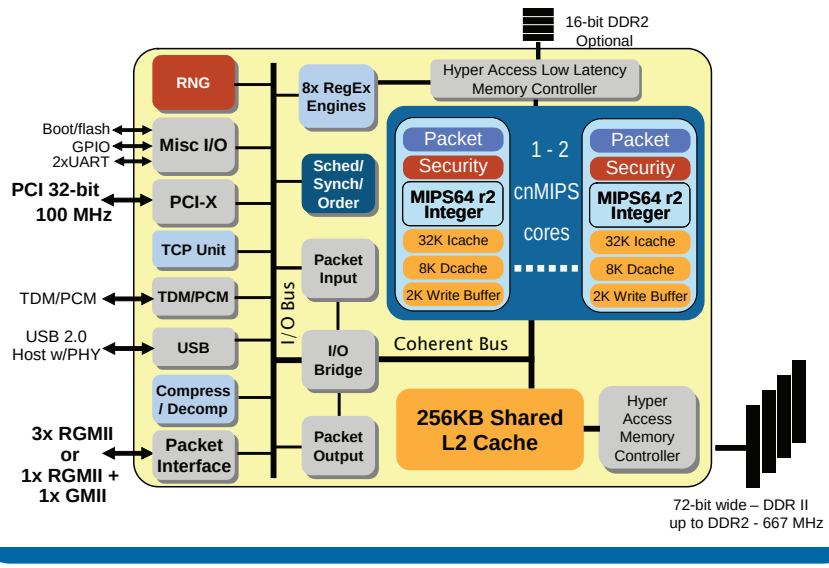

CAVIUM
2315 N. First Street
San Jose, CA 95131
T 408-943-7100
F 408-577-1992
E sales@cavium.com
www.cavium.com

CAVIUM

Multi-Core MIPS64® Processors

OCTEON® CN31XX Single and Dual Core MIPS64 Based SoCs

Product Brief

Single Chip UTM/Triple Play Solution

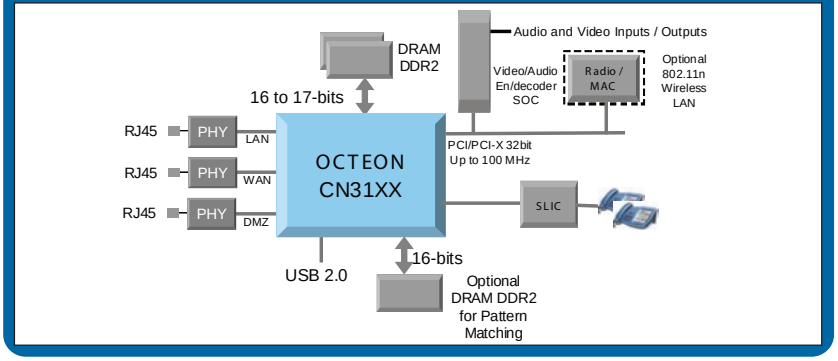

OCTEON CN31XX Applications

- Next generation integrated, standalone routers and appliances
- Unified Threat Management (UTM) security appliances with Firewall, VPN (IPsec, SSL), IDS, IPS and Anti-virus scanning
- Application aware / L4+ content processing and switching
- Triple-play voice, video and data wired and wireless gateways
- Network acceleration cards for security, TCP, content processing, compression
- Integrated management and route processor cards
- Switch/router line card and services card control and data-path processing
- TCP, iSCSI, RDMA, compression processing for storage applications

OCTEON Software Support

- Cavium SDK includes:
  - SMP LINUX support
  - Cavium Simple Executive for data plane applications
  - Complete GNU tool-chain, GDB, DDD and viewzilla for tuning
  - Optimized C libraries for security, regular expression, de/compression processing offload
  - Support for run-to-completion or pipelined software models
- Complete production quality development toolkits for IP, IPsec, SSL, TCP, SSL-VPN available
- Comprehensive Ecosystem support:
  - Popular third party Operating systems and toolchains, including MontaVista Linux, WindRiver VxWorks, ENEA OSE
  - Broad range of third-party application software vendors, including 6Wind, Intoto, D2 Technologies
- MIPS64/32 support enables thousands of MIPS and other C/C++ applications to be easily ported to OCTEON

OCTEON® CN31XX - Product Family

Device	Part Number*	cnMIPS cores	Performance	Option				L2 Cache	Interfaces			PCI / PCI-X	Memory I/O wECC	DFA Memory I/O wECC	Package
			Max. Available Instructions Per Second	NCP	EXP	SCP	CP		USB 2.0	TDM	Ethernet				
CN3110	CN3110-XXXBG868-Option Code	1	1G	x	x	x	x	256KB	x	x	3xRGMII or 1xRGMII+ 1xGMII	32-bit/ 100 MHz	64/72-bit DDR2-667	1x16-bit DDR2-667	868 BGA
CN3120	CN3120-XXXBG868-Option Code	2	2G	x	x	x	x		x	x					868 BGA

* (Part Number Options):

XXX = Device Speed Grade (300 = 300 MHz, 400 = 400 MHz, 500 = 500 MHz)

Option code for device family listed below:

NSP = Network Services Processor Includes: encryption, reg-ex acceleration, de/compression, networking, TCP acceleration and QoS
EXP = Extreme Processor Includes: reg-ex acceleration, de/compression, networking, TCP acceleration and QoS
SCP = Secure Communications Processor Includes: encryption, networking, TCP acceleration and QoS
CP = Communication Processor Includes: high performance packet processing, TCP acceleration and QoS

CAVIUM
2315 N. First Street
San Jose, CA 95131
T 408-943-7100
F 408-577-1992
E sales@cavium.com
www.cavium.com

2011 Cavium, Inc. All Rights reserved. NITROX and OCTEON are registered trademarks of Cavium, Inc.
All other brands and product names are registered trademarks of their respective owners.